1118 Wireless Remote Indicator Light

Description

The 1118 Wireless Remote Indicator Light provides one remote LED indicator that can be used to visually notify the user that a panic alarm has been activated. The 1118 is designed to operate on one CR123A battery or connect to an optional 12 VDC power supply.

The 1118 operates with the XR500 or XR100 Series Command Processor™ panels version 119 using the 1100X Wireless Receiver version 104.

What is Included

The 1118 includes the following:

- One 1118 Wireless Remote Indicator Light
- One 3.0V Lithium CR123A battery
- Hardware pack
- Serial number label

Optional items available:

- One Model 376 DC Power Supply
- One Model 378 Barrel Connector with Cord

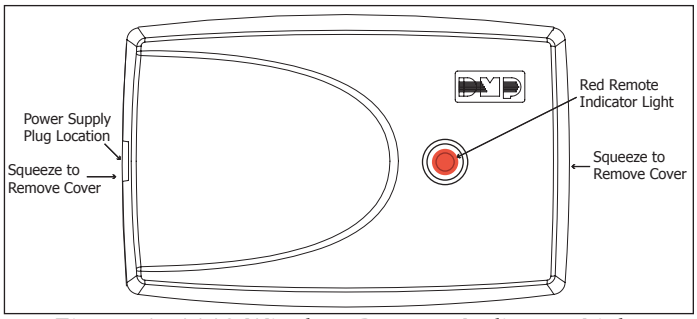

Figure 1: 1118 Wireless Remote Indicator Light

Serial Number

For your convenience, an additional pre-printed serial number label is included. Prior to installing the indicator light, record the serial number or place the pre-printed serial number label on the panel programming sheet. This number is required during programming.

Programming the 1118 in the Panel

In Output Information enter the output number, output name, eight-digit serial number, and supervision time. Specific output numbers are available for wireless. Output numbers 450-474 indicate whether the LED responds within 15 seconds (slow response) or 480-499 indicate whether the LED responds within 1 second (fast response). Program the 1118 Wireless Remote Indicator Light in Output Options as a Panic Alarm Output. Refer to the XR500 Series Programming Guide (LT-0679) or the XR100 Series Programming Guide (LT-0896).

Note: When a receiver is installed, powered down and powered up, the panel is reset, or programming is complete, the supervision time is reset. If the receiver has been powered down for more than one hour, the 1118 may take up to an additional hour to send a supervision message unless tripped, tampered, or powered up. This operation extends battery life. A missing message may display on the keypad until the supervision message is sent.

Selecting the Proper Location (LED Survey Operation)

The 1118 provides a survey capability to allow one person to confirm communication with the receiver while the cover is removed. The 1118 PCB Red Survey LED (see Figure 2) turns on whenever data is sent to the receiver then immediately turns off when the receiver acknowledgement is received. Pressing the tamper switch is a convenient way to send data to the receiver to confirm operation. When the 1118 does not receive an acknowledgement from the receiver, the survey LED remains on for about 8 seconds to let you know communication is not established. Communication is also faulty when the LED flashes multiple times in quick succession. Relocate the 1118 or receiver until the LED immediately turns off indicating the 1118 and receiver are communicating properly. Proper communication between the 1118 and receiver is verified when for each press or release of the tamper switch, the LED blinks immediately on and immediately off. Repeat this test to confirm five separate consecutive LED blinks. Any indication otherwise means proper communication has not been established.

1118 Indicator Light Operation

When a Panic Alarm is sent, the indicator light is on steady for five (5) minutes and then turns off. When a Panic Test is sent to the 1118 from the 1100 Series Receiver, the indicator light flashes quickly for five (5) minutes and then turns off.

Installing the 1118

Mount the 1118 on a flat surface such as a wall or single-gang box. When using the optional Model 376 plug-in power supply, mount the 1118 near a wall outlet. See Figure 2 for mounting hole locations.

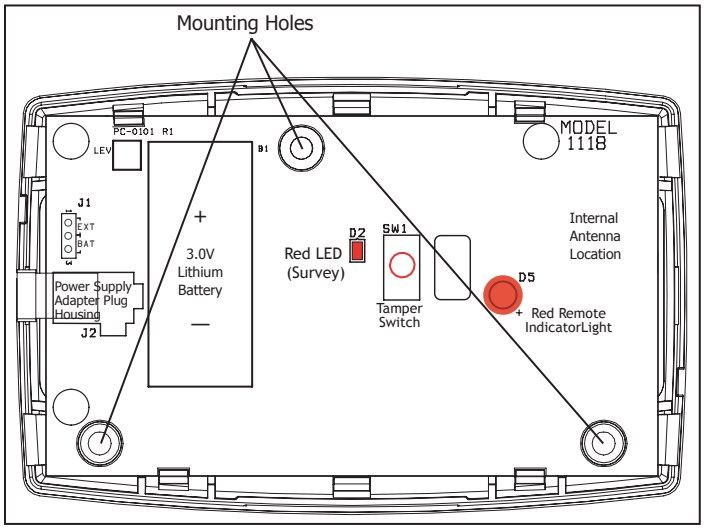

Figure 2: 1118 Remote Indicator Light PCB

Powering the 1118

The 1118 can be powered by:

- CR123A 3.0 VDC battery
- Model 376 plug-in power supply
- 12 VDC Power Supply

Note: When setting up a wireless system, it is recommended to program outputs and connect the receiver before installing batteries in the 1118 or connecting the optional power supply.

Battery Power

Observe polarity when installing the battery. Use only 3.0V Lithium batteries, DMP Model CR123, or the equivalent battery from a local retail outlet. Do not connect a power supply when operating using battery power.

1. Squeeze the cover left and right sides together to remove. Lift the cover up and away from the base to avoid damage to the Red LED. See Figure 1.
2. Install the supplied jumper on the two J1 pins next to BAT to enable battery operation.

   Note: Battery operation is not enabled if the jumper is on the J1 pins next to EXT.
3. If replacing the battery, remove the old battery and dispose of it properly.
4. Place the 3.0V Lithium battery in the holder and press into place. See Figure 2 for Battery location.
5. Snap the cover back into place.

Caution: Properly dispose of unused batteries. Do not recharge, disassemble, heat above 212°F (100°C), or incinerate. Risk of fire, explosion, and burns.

Battery Life Expectancy

Typical battery life expectancy for the 1118 is two months when programmed as a fast response output and five years when programmed as a slow response output. Refer to the XR500 Series Programming Guide (LT-0679) or the XR100 Series Programming Guide (LT-0896) as needed. DMP wireless equipment uses two-way communication to extend battery life.

The following situation can extend battery life expectancy:

- Minimal use of the indicator light for annunciation.
- Extend supervision time in panel programming.
- Program the indicator light as a slow response output in panel programming.

The following situations can reduce battery life expectancy:

- If a receiver is unplugged, too far away, or not installed.

  Note: The 1118 continues to send supervision messages until a receiver returns an acknowledgement. After an hour the 1118 only attempts a supervision message every 60 minutes.
- When installed in extreme hot or cold environments.

Optional External DC Plug-in Power Supply

When using the optional Model 376 plug-in DC power supply, mount the 1118 near a wall outlet. Do not install a battery when operating using the plug-in power supply. The power supply does not charge the battery.

Use the following steps to connect the plug-in power supply:

1. Squeeze the left and right cover sides together to remove. See Figure 1.
2. Install the included jumper on the two J1 pins next to EXT to enable power supply operation.

   Note: Power supply operation is not enabled if the jumper is on the J1 pins next to BAT.
3. Snap the cover back into place.
4. Plug the barrel connector into the J2 barrel jack at the side of the 1118 cover. See Figure 3.
5. Plug the power supply into a 110 Volt AC outlet.

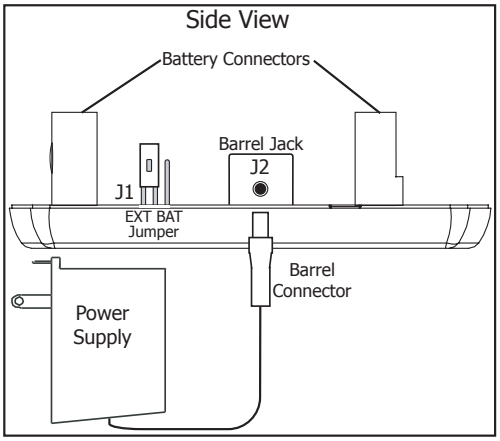

Figure 3: 1118 Side View

Optional External 12 VDC Power Supply

The 1118 can also be powered from a 12 VDC power supply such as a DMP Model 502-12. Use DMP Model 378 barrel connector with cord, or the equivalent 5.5 x 2.1 mm barrel connector from a local retail outlet and 22 AWG wire to connect to the power supply. Do not install a battery when operating using the external power supply. The power supply does not charge the battery.

Use the following steps to connect the power supply:

1. Squeeze the left and right cover sides together to remove. See Figure 1.
2. Install the included jumper on the two J1 pins next to EXT to enable power supply operation.

   Note: Power supply operation is not enabled if the jumper is on the J1 pins next to BAT.
3. Snap the cover back into place.
4. If using the Model 378, connect the Black wire with White stripe to the J6 positive terminal on the 502-12 power supply PCB and the Black wire to the J6 negative terminal.
5. Plug the Model 378 barrel connector into the J2 barrel jack at the side of the 1118 cover. See Figure 4.

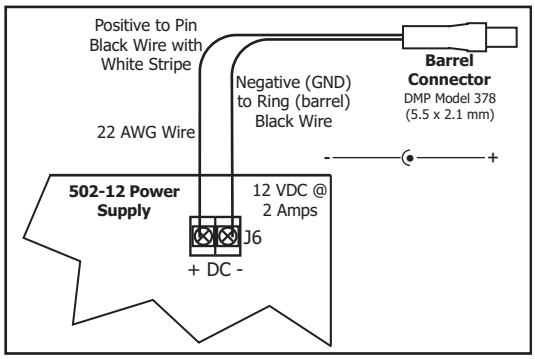

Figure 4: Power Supply Connection

6. If installing a purchased 5.5 x 2.1 mm barrel connector, use 22 AWG wire to connect the positive wire to the pin and negative wire (GND) to the ring (barrel). See Figure 5.
7. Connect the 22 AWG wire ends to the J6 DC connector on the 502-12 power supply PCB. Observe positive and negative polarity on all connections.
8. Plug the barrel connector into the J2 barrel jack at the side of the 1118 cover. See Figure 4.

1118 Testing

To test the 1118 from a keypad, access the User Menu Outputs On/Off option. The 1118 LED should light within 15 seconds of entering the assigned output number and selecting on. Refer to the XR500/XR100 User's Guide (LT-0683).

FCC Information

This device complies with Part 15 of the FCC Rules. Operation is subject to the following two conditions:
(1) This device may not cause harmful interference, and
(2) this device must accept any interference received, including interference that may cause undesired operation.

The antenna used must be installed to provide a separation distance of at least 20 cm (7.874 in.) from all persons. It must not be co-located or operated in conjunction with any other antenna.

Changes or modifications made by the user and not expressly approved by the party responsible for compliance could void the user's authority to operate the equipment.

NOTE: This equipment has been tested and found to comply with the limits for a Class B digital device, pursuant to part 15 of the FCC Rules. These limits are designed to provide reasonable protection against harmful interference in a residential installation. This equipment generates, uses and can radiate radio frequency energy and, if not installed and used in accordance with the instructions, may cause harmful interference to radio communications. However, there is no guarantee that interference will not occur in a particular installation. If this equipment does cause harmful interference to radio or television reception, which can be determined by turning the equipment off and on, the user is encouraged to try to correct the interference by one or more of the following measures:

- Reorient or relocate the receiving antenna.
- Increase the separation between the equipment and receiver.
- Connect the equipment into an outlet on a circuit different from that to which the receiver is connected.
- Consult the dealer or an experienced radio/TV technician for help.

Specifications

Battery	
Life Expectancy	2 months (Fast Response) 5 years (Slow Response)
Type	3.0V Lithium CR123A
See Battery Life Expectancy for full details.	
Frequency Range	903-927 MHz
Dimensions	4.65" L x 3.1" W x 1.4" H
Color	White
Housing Material	Flame retardant ABS

Accessories

CR123	DMP 3.0V Lithium Battery
376	DC Plug-in Power Supply
378	Barrel Connector with Cord
502-12	12 VDC Power Supply

Compatibility

The 1118 Wireless Remote Indicator Light is compatible with:

XR500 or XR100 panels version 119
1100X Receiver version 104

Patents

Patent(s) Pending

Listings and Approvals

FCC Part 15 Registration ID CCKPC0101
IC Registration ID 5251A-PC0101

Digital Monitoring Products
800-641-4282
www.dmp.com
Made in the USA
INTRUSION • FIRE • ACCESS • NETWORKS
2500 North Partnership Boulevard
Springfield, Missouri 65803-8877

MADE IN U.S.A.